KYCON, Inc. 305 Digital Drive, Morgan Hill, CA 95037 (408)494-0330

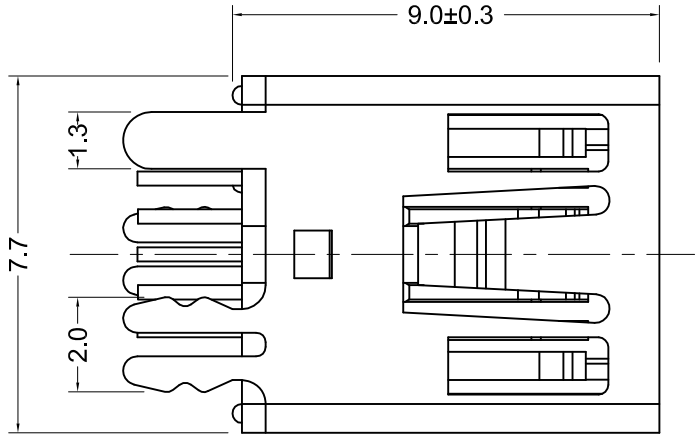

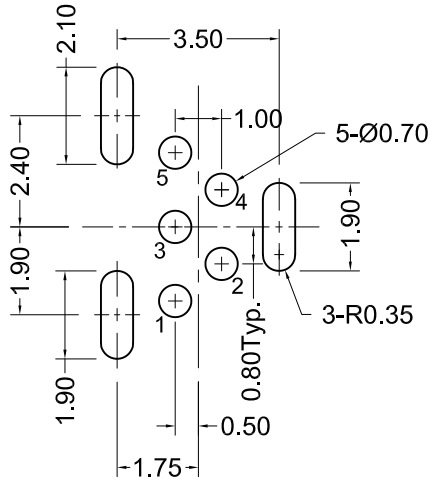

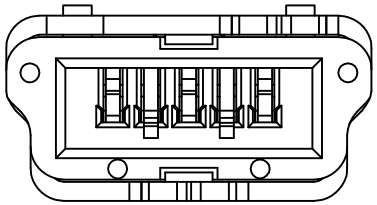

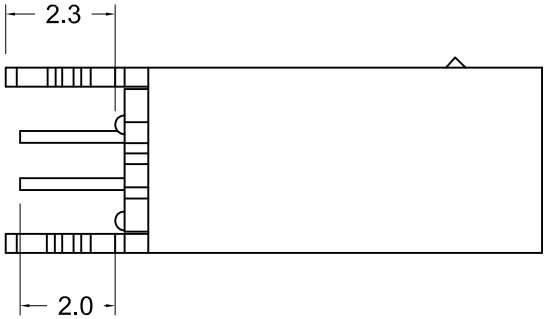

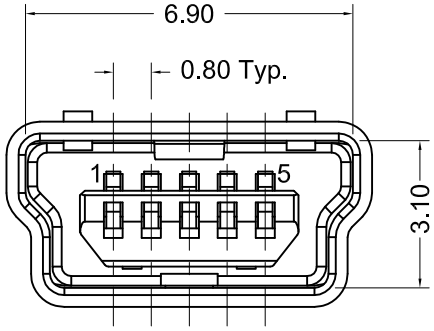

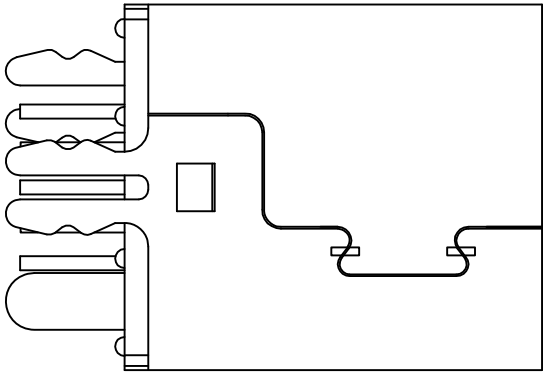

Materials and Finish

Shell: Copper Alloy
Plating: Nickel

Insulator: UL94V-0 Rated
PBT Thermoplastic
Color - Black

Contacts: Copper Alloy
Plating - 30u" Gold
on Contact Area,
3.8um (150u") Tin
on Solder Tail, all over
1.27um (50u") Nickel

Electrical Specifications

Rated Voltage:
30V AC (rms)

Contact Current Rating:
1A Max.

Contact Resistance:
50 milliohms Max.

Insulation Resistance:
1000 Megohms Min.

Dielectric Withstanding:
100V AC

Operating Temperature:
-55°C to +85°C

Durability: 5000 mating cycles

RoHS COMPLIANT

c UL us E134345

C SP US LR78160

Tolerances
X.X ± 0.25
X.XX ± 0.15
Unless Stated Otherwise

REV.	DATE	DESCRIPTION	REV. BY	CHK. BY
A1	1/15/08	Release Drawing	H. MA	N/A
A2	03/14/08	ECO #08-021	R. Aguirre	H. MA
A3	11/18/08	ECO# 08-089	S. Vien	H. MA
A4	01/16/13	ECO #12-063	S. Vien	P. DalCanto
A5	05/07/13	ECO #13-019	W. Cook	P. DalCanto
A6	07/11/18	Update Address & RoHS	C. Kelleher	C. Furumasu

DRAWN BY	DATE
H. MA	9/18/06
	UNITS
	mm

KMBVX-TH-5S-B30

USB, Mini-B Type Socket, RoHS Compliant

5- Pin, Vertical Mount, Through Hole

KYCON